HICUT

High Cutoff LED Wallpack

5 YEAR WARRANTY · ETL US · DLC PREMIUM · IK08 · IP65 · CE

Applications: Security, pathway and perimeter lighting, building entryways, walkways and much more

PERFORMANCE SUMMARY

Sunled's HiCut Series wall lights utilize glare free LED placement and reflector technology. These fixtures produce a smoother and whiter light resulting in more lumens on the ground, making it the best choice when replacing traditional HID wall packs.

With an architectural variation of a familiar classic, the HiCut high cutoff wall pack portfolio is ideal for providing the flexibility of form needed to compliment a wide range of surroundings

Construction

- Architectural design of classic shape blends harmoniously into outdoor environments
- Durable extruded die cast aluminium housing
- High impact polycarbonate lens
- Traditional body profile and standard installation requirements with performance LED technology

Optics

- Custom internal LED assembly precisely and efficiently directs light at desired locations, eliminating glare and offensive light
- Unique internal design that allows for lower operating temperatures which result in a brighter, whiter light, more stable colour and longer LED driver life
- 120° wide beam high cut off distribution

Specification

Volts: AC120-277VAC
Surge Protection: 2kV line-line, 4kV line earth
Average Rated Life: 50,000hrs
Environment Location: IP65
Impact Rating: IK08
Ambient temp: -4°F to 122°F
PF: > 0.95
CRI: RA80

PHOTOMETRICS

120°

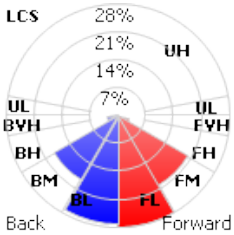

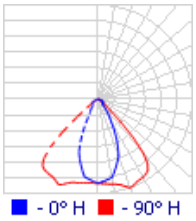

DIMENSIONS

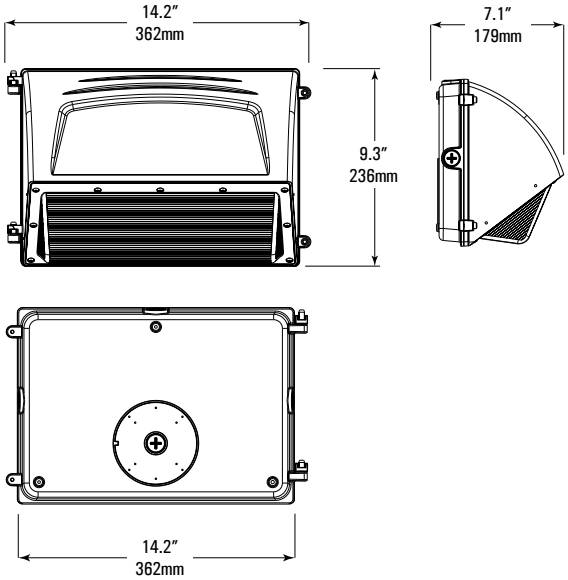

PRODUCT CODE

Example HiCut cat. 60.P.DG.4.PC

Model No	Wattage	Finish	Color Temperature (°K)	Options
HiCut	60 - 60W/7,200lms	DG - Dark Gray	4 - 4000	PC - Photocell
	80 - 80W/9,600lms		5 - 5000	0 - None
	100 - 100W/12,000lms		5 - 5700	
	120 - 120W/14,400lms			

SUNLED INDUSTRIES
14210 Roosevelt Ave, Flushing NY 11354 . Phone: 917.563.7078 . www.sunledind.com
© 2021 Sunled Industries LLC. All Rights Reserved