HAWK EYE

Flush LED Canopy Light

Applications: Gas stations, transport and logistics, parking garages

PERFORMANCE SUMMARY

The Hawk Eye Series LED canopy light has a slim low profile design that can mount virtually on any canopy/soffit and is the perfect upgrade solution

The high performance LED can not only outperform existing LED and MH fittings but also comes with a range integral controls for a complete energy saving solution

Features

- Exceptional operating efficiency of 150lm/W
- High output Philips LumiLEDs COB
- Die cast thick gauge aluminium alloy construction
- Surface finished with a proprietary powercoat, withstanding harsh industrial conditions without cracking or peeling
- Anti yellowing UV and fire resistant finish and lens
- Integral microwave motion and 1-10V dimming options
- Selectable SKUs offer 4 wattages selections at 25% intervals
- 6kV built in surge protection

Specification

Volts: AC100-277VAC
Average Rated Life: 50,000hrs
Environment Location: IP65
Ambient temp: -4°F to 131°F
Beam Angle: 110°
CRI: >RA70 PF: >0.9
BUG: B4-U2-G2
Surge Protection: 6kV

PHOTOMETRICS

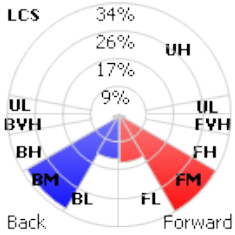

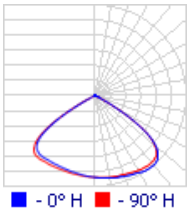

DIMENSIONS

Weight (May vary with accessories)
15.0lbs (6.8kg)

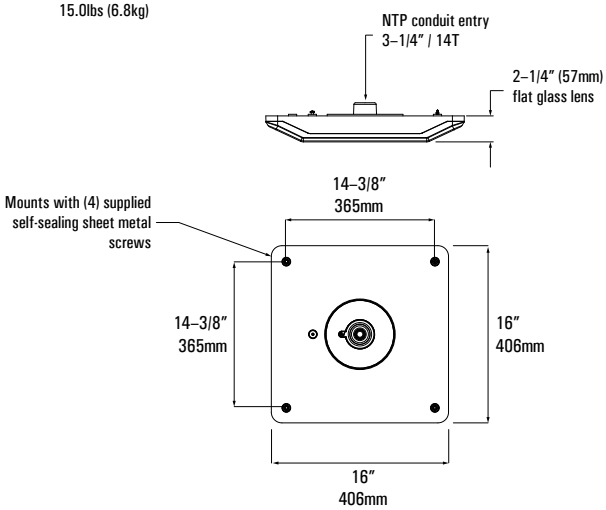

PRODUCT CODE

Example Hawk Eye cat.100.150.60.C.DIM

Model No	Voltage (V)	Wattage (W)	Color Temp	Mounting	Options
Hawk Eye	100 - 100-277V 480 - 200-480V	120 - Lumen Selectable 9,000-18,000 lms / 60-120W 150 - Lumen Selectable 7,500-22,500 lms / 50-150W	30 - 3,000K 40 - 4,000K 50 - 5,000K 60 - 6,000K	C - Ceiling R - Rod	DIM - 0-10V Dimmable EM - Emergency Backup 0 - None

100 Duffy Ave, Hicksville NY 11801 . Phone: 917.563.7078 . www.sunledind.com
© 2023 Sunled Industries LLC. All Rights Reserved