VENUS

Single Basket LED Troffer

Applications: Office buildings, education and healthcare, convenience stores, supermarkets and retail, civic and government

PERFORMANCE SUMMARY

The attractively-priced Venus is your best-in-value ambient lighting solution for office, retail, healthcare and other commercial projects.

The Venus is a center-basket troffer features a contemporary design and high-efficiency LED technology. The fixture's shallow depth allows for easy installation and multiple control options offer versatility for configuration—all backed by reliable performance.

Features

- Featuring Plug and Play Bluetooth Smart Technology (BST) direct wireless control
- Smart sensor control equipped with embedded daylighting and motion sensors for intuitive lighting control
- Reformative optics delivering comfortable low brightness distribution for a wider, smoother and more uniform light output
- Lumen packages ranging from 2,900 to 6,250 lumens
- 3500K, 4000K, 4500K, 5000K and 6000K CCTs
- Up to >145LPW with the high efficiacy
- Multiple driver options offering 1% and 10% dimming
- 2.80" mount depth
- Integrated emergency battery pack option

Specification

Volts: AC100-277V
Average Rated Life: L80/60,000hrs
CRI: RA85
Beam Angle: 140°
Ambient Temp: -20°C to 40°C
Dimming: 0-10v

PHOTOMETRICS

Venus 2x2ft HP 26W

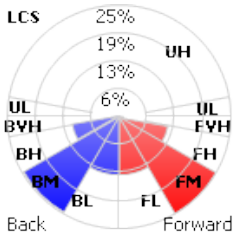

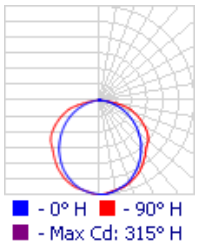

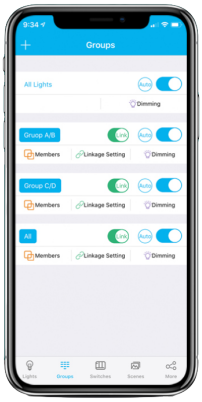

App Control

- Instant scenes
- Auto brightness
- Auto calibration
- High end trim
- Group control
- Dimming
- Bypass mode

PRODUCT CODE

Example Venus cat. LP2/22635SRSBST

Model No	Output	Dimension	Wattage (W)/ Lumens	Color Temperature (°K)	Switches	Control
Venus	LP Low Power 125lm/W	2/2 - 2x2ft 603 x 603 x 72mm	26 - 26W/3,250lms 32 - 32W/4,000lms	35 - 3500 4 - 4000 45 - 4500 5 - 5000 6 - 6000	SRS - Solar Remote Switches WS - Smart Wall Switch 0 - None	BST - Bluetooth/Daylight Motion/Dimming) EM - Emergency Battery Backup DIM - 0-10v dimmable 0 - None
		2/4 - 2x4ft 603 x 1213 x 72mm	32 - 32W/4,000lms 50 - 50W/6,250lms			
	HP High Power 145lm/W	2/2 - 2x2ft 603 x 603 x 72mm	20 - 20W/2,900lms 26 - 26W/3,770lms			
		2/4 - 2x4ft 603 x 1213 x 72mm	26 - 26W/3,770lms 40 - 40W/5,800lms			

14210 Roosevelt Ave, Flushing NY 11354 . Phone: 917.563.7078 . www.sunledind.com
© 2020 Sunled Industries LLC. All Rights Reserved

VENUS
Single Basket LED Troffer

DIMENSIONS

Venus 2/4

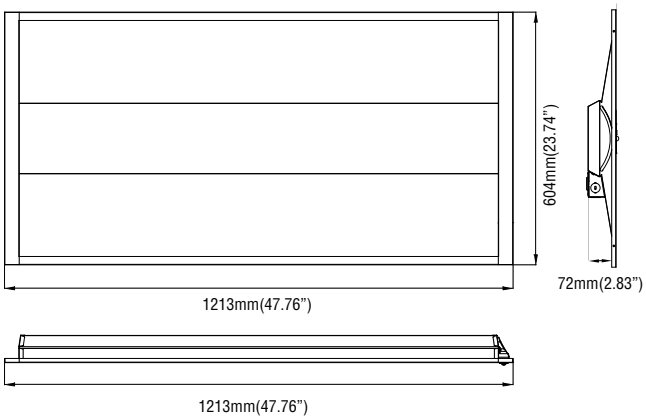

Venus 2/2

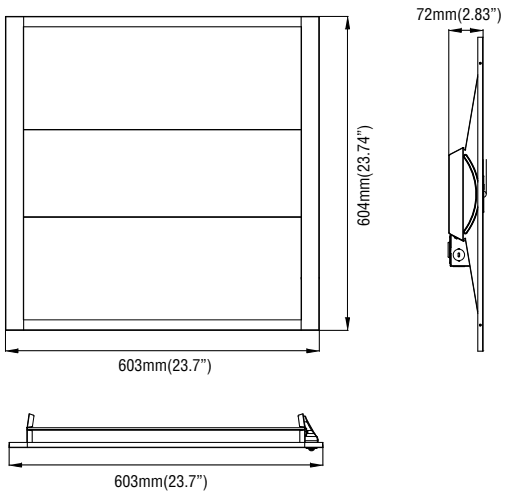

WALLPLATES

Wall Switch (WS)

Solar Switch (SRS)

BLUETOOTH SMART CONTROL (BST)

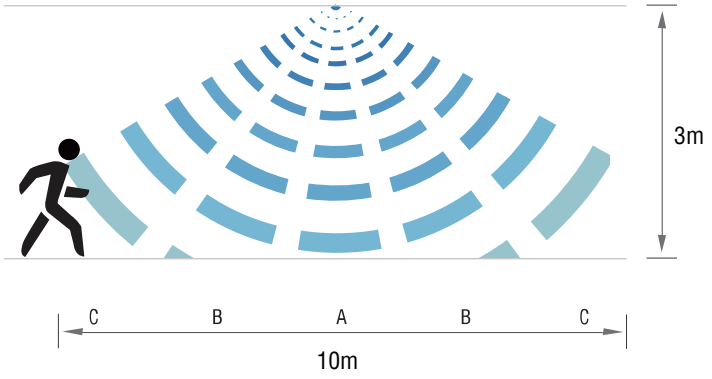

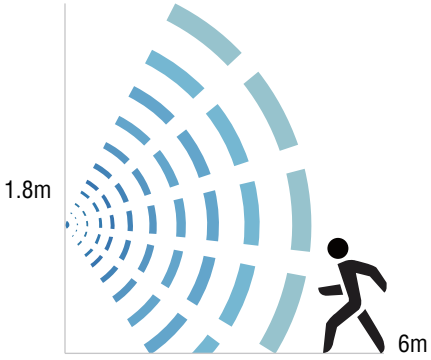

14210 Roosevelt Ave, Flushing NY 11354 . Phone: 917.563.7078 . www.sunledind.com
© 2020 Sunled Industries LLC. All Rights Reserved

VENUS

Single Basket LED Troffer

INSTALLATION INSTRUCTIONS

The smart lighting system used in the Venus LED troffer Series is based on Bluetooth. Specialised device app's are designed to customise, set and operate the fixtures. As dimming can be acheived wirelessly through app control, 0-10V dimming wires can remain unused and do not need to be connected, unless smart control is bypassed. This is acheived by disconnecting the white control cord inside the the driver compartment and connecting the purple and gray 0-10V dimming cables, automatically activating normal dimming mode

Operating Principle

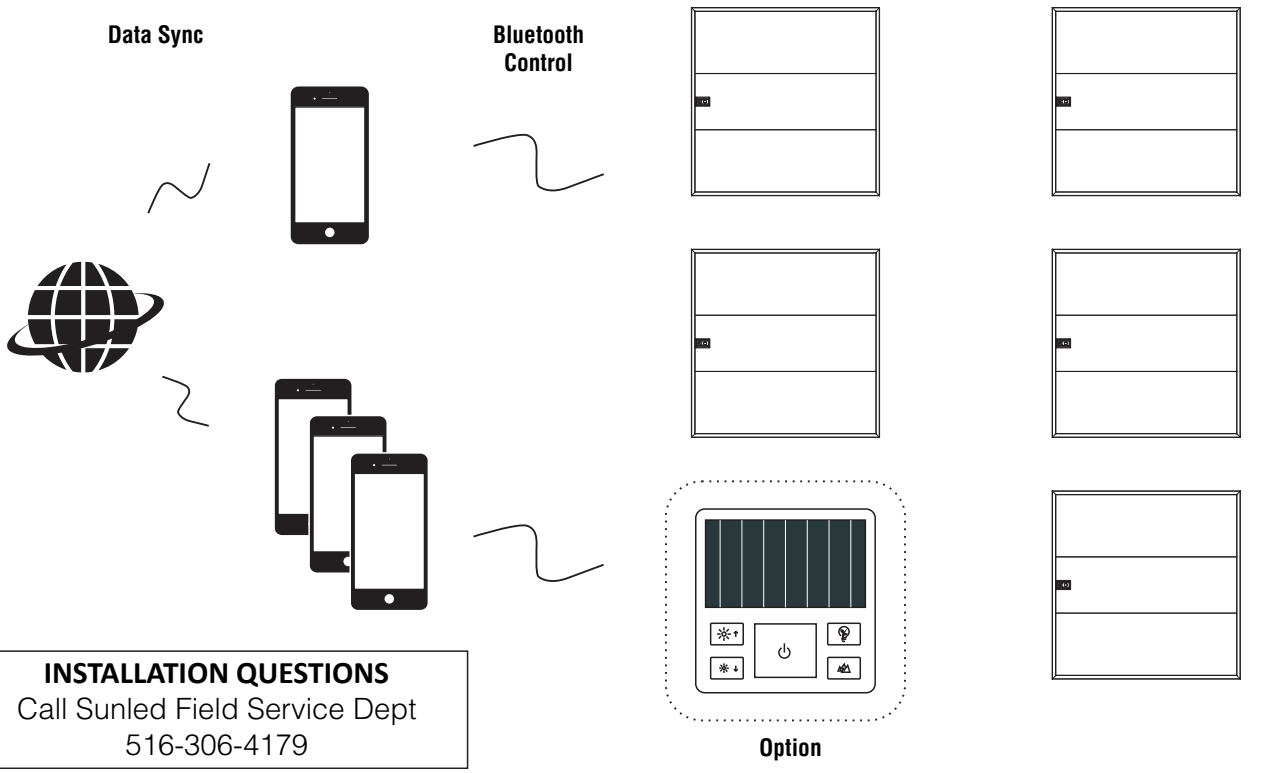

INSTALLATION QUESTIONS
Call Sunled Field Service Dept
516-306-4179

⚠ WARNING

Risk of fire or electric shock. Luminaire wiring and electrical parts may be damaged when drilling during installation of LED troffer. Check for enclosed wiring and components

⚠ WARNING

Risk of fire or electric shock. LED troffer installation requires knowledge of luminaire electrical systems. If not qualified, do not attempt installation. Always contact a qualified electrician

⚠ WARNING

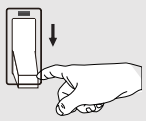

RISK OF FIRE, ELECTRIC SHOCK OR PERSONAL INJURY

Before installation, turn power off

SUNLED INDUSTRIES

14210 Roosevelt Ave, Flushing NY 11354 . Phone: 917.563.7078 . www.sunledind.com
© 2020 Sunled Industries LLC. All Rights Reserved

VENUS
Single Basket LED Troffer

Fixture Installation

(1)

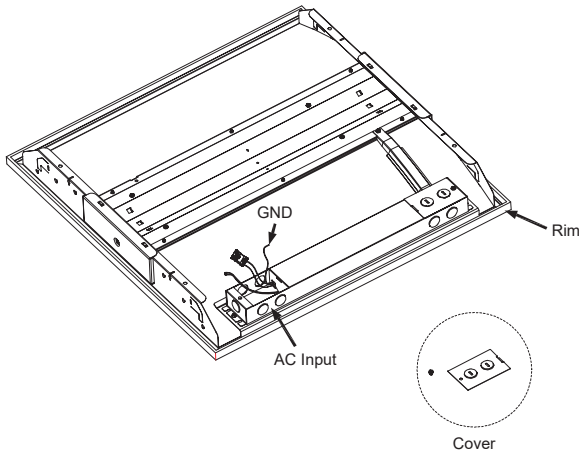

Remove the AC input end cover with from the driver compartment with tools. Place the troffer inside the ceiling

(2)

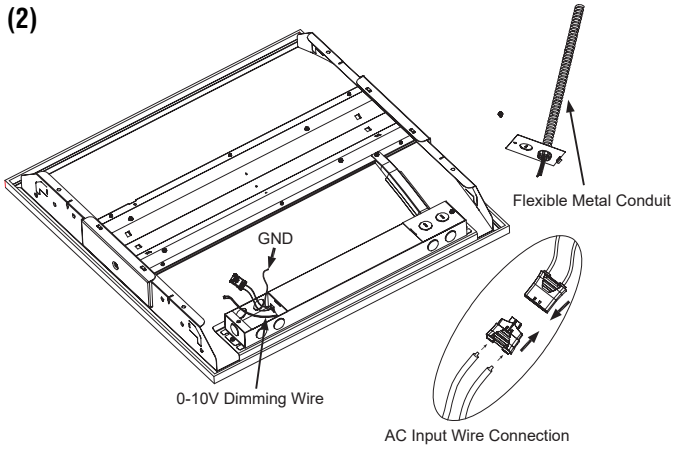

Push through the top cable entry points on the driver compartment with a tool and insert a flexible metal conduit through the hole as shown. Side cable entry points can also be used if desired. Connect the L, N, and GND wires. If needed, connect the dimming wires (purple wire "+" grey wire "-")

(3)

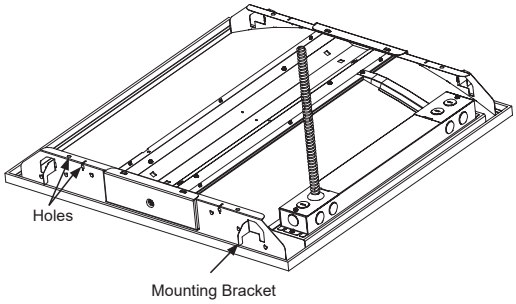

Reattach the driver cover. Fix the troffer to the ceiling structure by anchoring a safety cable to holes on the side of the troffer, fixed to ceiling structure. Pull out 90° mounting bracket and position fixture in place

(4)

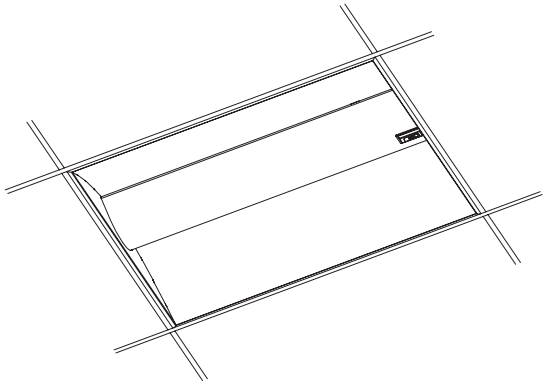

The recessed troffer installation is finished.

App Configuration

1 Download and install the IOS or Android App “Light Remote LED” on smart phone or device
2 Power and turn on all the fixtures. Start the App, turn on Bluetooth and search for the fixtures
3 The found fixtures will be shown in “Added” list. Check power connection and turn on fixtures that are not found and search again
4 Once all fixtures are added functions such as Groups, Scenes, Switching, Schedules can be programmed

FAQ

Fixture is not found

Make sure the fixture is powered and turned on and smart device bluetooth is working. Search again; If fixture still not found, completely shut down the app on the smart device and restart. Turn the fixture off and on and search again. Repeat if necessary

Bluetooth wall switch is not found or cannot be added

Ensure switches are searched within 30 seconds of starting the app. Touch and hold the button a few times until is found

User settings do not synchronise on all smart devices

Network connection is needed to synchronize data. Make sure wireless, WIFI or internet connection is secure and connected

SUNLED INDUSTRIES
14210 Roosevelt Ave, Flushing NY 11354 . Phone: 917.563.7078 . www.sunledind.com
© 2020 Sunled Industries LLC. All Rights Reserved